TEAR SHEET

Lido Large Chandelier
Item # NW 5041AM/HAB

Designer: Niermann Weeks

Height: 35"
Width: 38.25"
Canopy: 5.5" Round
Finishes: AM/HAB
Socket: 6 - E12 Candelabra
Wattage: 6 - 60 C11
Weight: 82 Pounds

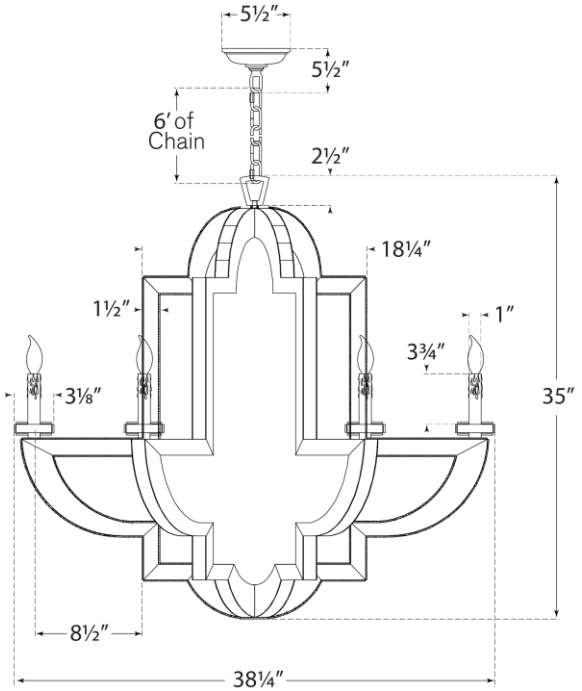

VISUAL COMFORT & CO.